CHANGE FOR THE BETTER WITH ENERGY STAR

LANDAN™

FPD8087** Ceiling Fan

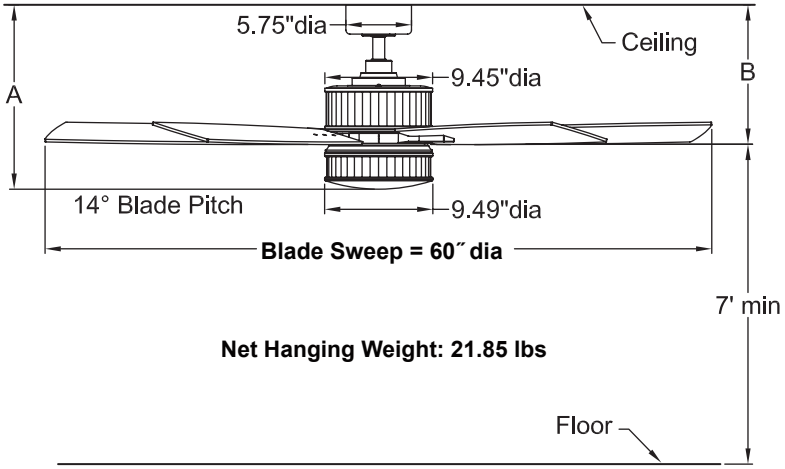

	A	B
Fan w/4.5˝ downrod	16.16˝	12.22˝
Fan w/12˝ downrod	23.66˝	19.72˝
Fan w/18˝ downrod	29.66˝	25.72˝
Fan w/24˝ downrod	35.66˝	31.72˝
Fan w/36˝ downrod	47.66˝	43.72˝
Fan w/48˝ downrod	59.66˝	55.72˝
Fan w/60˝ downrod	71.66˝	67.72˝
Fan w/72˝ downrod	83.66˝	79.72˝

Available Finishes		
Fan / Housing Assembly		**Blades - Traditional**
BA	Bronze Accent	Cherry / Walnut with Forsted Glass
SN	Satin nickel	Cherry / Maple with Forsted Glass

Airflow / Energy Efficiency Info (120V)					
Fan Speed	Max RPM	CFM	CFM / Watts	Amps	Watts
I	51	2636	654	0.09	4.0
II	63	3424	535	0.13	6.4
III	76	4141	442	0.18	9.4
IV	89	4769	340	0.25	14.0
V	101	5404	279	0.32	19.4
VI	119	6134	208	0.46	29.5

INSTALLATION REQUIREMENTS:
Fan must be attached to a securely anchored electrical junction box capable of withstanding a load of at least 50 lbs.

ELECTRICAL REQUIREMENTS:
Requires a grounded electrical supply line of 120 volts AC, 60 Hz, 15 amp circuit.

MOTOR SPECS:
DC-125S DC motor is designed for optimal performance with this fan. Fan is Energy Star Rated.

BLADES:
A set of five 24.63˝ reversible traditional wood blades is included.

CONTROL OPTIONS:
TR41 hand-held DC fan remote control is included. Push botton remote control has 6 fan speeds, reverse, off button and infinitely-varying uplight and downlight controls. Optional TW42 wall control is avaiable—sold separately. Instructions are provided with each control.

LIGHTING OPTIONS:
Uplight with eight 10-watt LED bulbs and downlight with twelve 15-watt LED bulbs are included.
See our catalog or visit www.fanimation.com for available lighting options.

DOWNROD OPTIONS:
Fan comes with 1˝ dia. x 4.5˝ long downrod. Optional downrods available in 12”, 18˝, 24˝, 36˝, 48˝, 60˝, and 72˝ lengths. A downrod coupler is available for installations requiring a downrod longer than 72˝. Fan can be mounted on a sloped ceiling up to 30°. Most sloped ceiling installations require a downrod longer than the standard 6˝downrod. Optional sloped ceiling ball kits (SCB1-52) are available for slope angles greater than 30° and up to 52°. Call technical support for more information.

LOCATION USE:
Fan is rated for dry locations only.