CHANGE FOR THE BETTER WITH ENERGY STAR

EDGEWOOD® SERIES

TF971** Deluxe Wet Locaton **Fan**

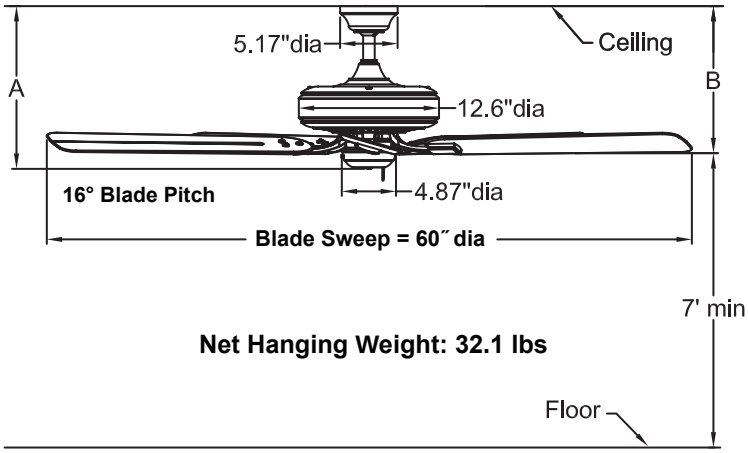

	A	B
Fan w/4.5˝ downrod	14.62˝	13.22˝
Fan w/12˝ downrod	22.12˝	20.72˝
Fan w/18˝ downrod	28.12˝	26.72˝
Fan w/24˝ downrod	34.12˝	32.72˝
Fan w/36˝ downrod	46.12˝	44.72˝
Fan w/48˝ downrod	58.12˝	56.72˝
Fan w/60˝ downrod	70.12˝	68.72˝
Fan w/72˝ downrod	82.12˝	80.72˝

Available Finishes		
Fan / Housing Assembly		**Blades - Traditional**
AZ	Aged Bronze	Dark Cherry
SN	Satin Nickel	Mahogany
WH	White	White

Airflow / Energy Efficiency Info (120V)					
Fan Speed	Max RPM	CFM	CFM / Watts	Amps	Watts
High	159	8963	106	0.73	84.3
Med	115	6596	132	0.56	49.8
Low	74	4001	182	0.37	22.0

INSTALLATION REQUIREMENTS:
Fan must be attached to a securely anchored electrical junction box capable of withstanding a load of at least 50 lbs.

ELECTRICAL REQUIREMENTS:
Requires a grounded electrical supply line of 120 volts AC, 60 Hz, 15 amp circuit.

MOTOR SPECS:
212 x 25 motor is designed for optimal performance with this fan. Fan is Energy Star Rated. 220 VAC, 50 Hz export version available.

BLADES:
A set of five 26” all-weather composite wood blades is included.

CONTROL OPTIONS:
Optional CW1, CW1SW, CW2, CW5 and CWRL4 wall controls and CRL4WH and CRL8TS remote controls (with receiver units) are available—sold separately. Instructions are provided with each control.

LIGHTING OPTIONS:
Optional lighting fitters and light kits are available. See our catalog or visit www.fanimation.com for available lighting options.

DOWNROD OPTIONS:
Fan comes with 1˝ dia. x 4.5˝ long downrod. Optional downrods available in 12˝,18˝, 24˝, 36˝, 48˝, 60˝, and 72˝ lengths. A downrod coupler is available for installations requiring a downrod longer than 72˝. Fan can be mounted on a sloped ceiling upto 30°. Most sloped ceiling installations require a downrod longer than the standard 6˝ downrod. Call technical support for more information.

LOCATION USE:
Fan is rated for dry, damp and wet locations.